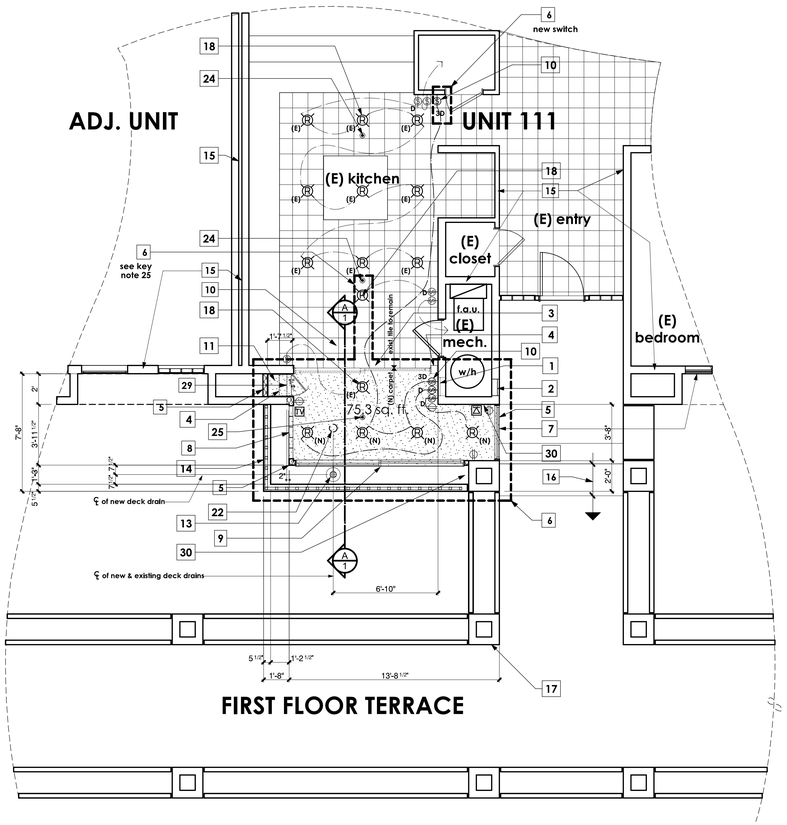

COMBINATION: DEMOLITION, FLOOR, & ELECTRICAL PLANS

scale: 1/4" = 1'-0"

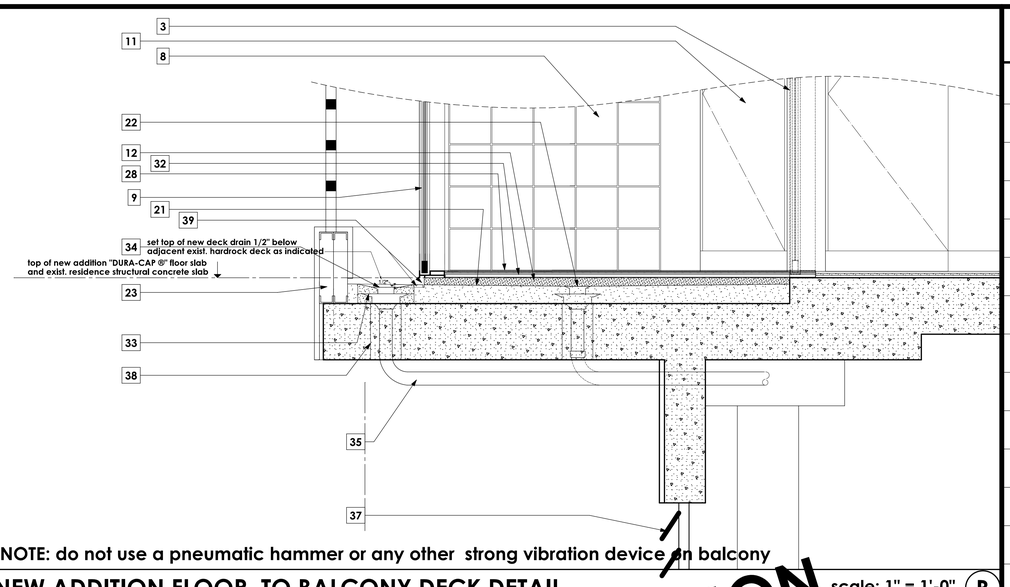

NOTE: do not use a pneumatic hammer or any other strong vibration device on balcony

NEW ADDITION FLOOR TO BALCONY DECK DETAIL

scale: 1" = 1'-0" (B)

NOT FOR CONSTRUCTION
UNLESS PRINTED ON BLUE PAPER

scale: 1/4" = 1'-0"

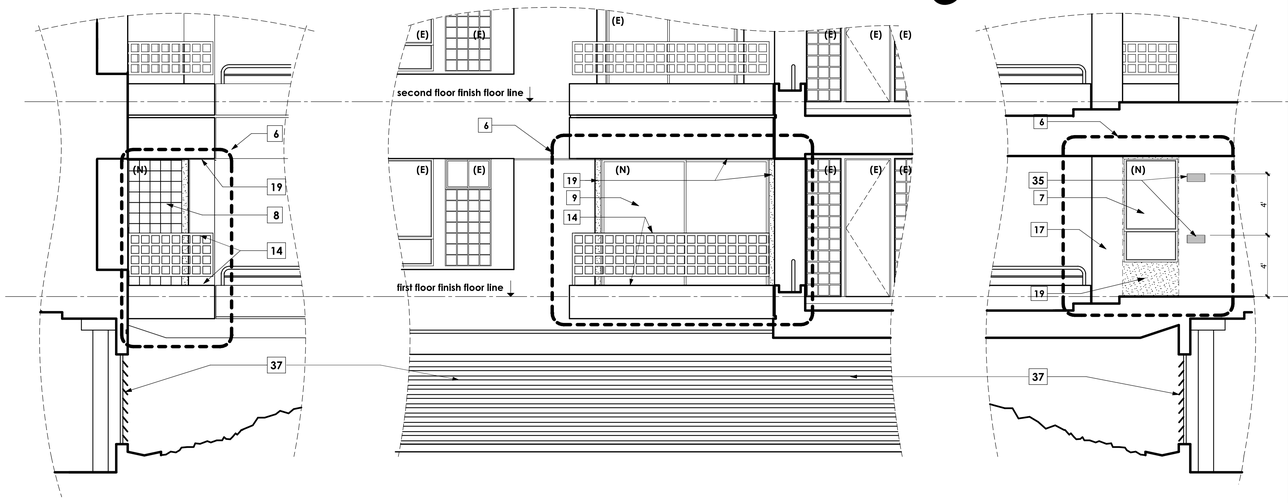

partial left side elevation

partial front elevation

partial right side elevation

PARTIAL EXTERIOR ELEVATIONS SHOWING NEW ADDITION

scale: 1/4" = 1'-0"

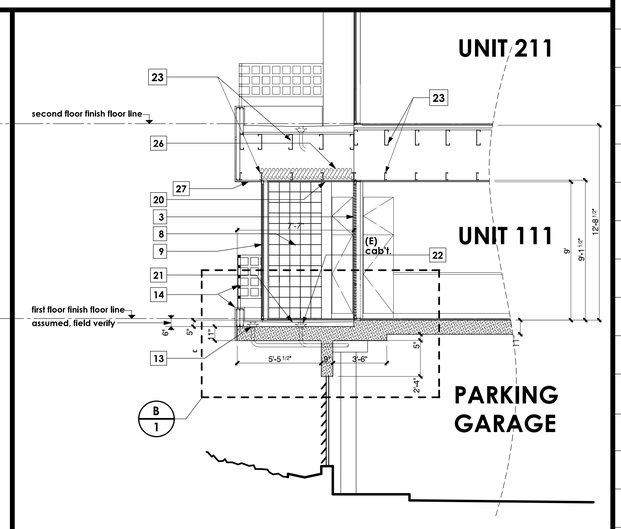

PARTIAL BUILDING SECTION A

scale: 1/4" = 1'-0"

PLAN KEY NOTES :

1	existing 6" x 14" mechanical room vents to be removed from area of new construction - relocate as indicated on plan and right side exterior elevation see key note 2 for more info.
2	relocate or provide new 6" x 14" vents to match exist. at this location - providing 1 sq. in. of combustion air supply per 1000 BTU for exist. water heater and forced air furnace units 1/2 high & 1/2 low
3	exist. 9'-0" x 9'-0" sliding glass door & frame to be removed
4	exist. steel. stud wall framing to be removed as indicated by dotted lines - see plan
5	new lightgage steel framing (3 1/2" stl. studs) install per original documents @ 24" max. o.c.
6	limit of new construction line
7	new 3'-6" x 6'-6" dbl. glazed, single hung window to match existing window - frame material, finish, color, and operable portion height to match exist. window @ exist. bdrm. exactly (except for new overall size) see plan & exterior elevations
8	new 3'-5 1/2" x 8'-11 1/2" glass block window - (5 rows & 13 courses w/ 1/4" grout space all around) new blocks, grout, frame material, finish, & color to match exist. glass block windows @ entry exactly
9	new custom 11'-0" x 9'-0" dbl. glazed, tempered glass, sliding glass door - frame material, finish, color, and hardware to match existing exactly - set sill in mastic
10	new recessed down lighting & associated switches to match exist. exactly
11	new cabinet w/ adjustable shelves to match exist. adjacent kitchen cabinet
12	new "DURA-CAP ®" self leveling floor slab (shown densly stippled) poured directly over existing hard rock deck - top of new pour to be level & flush with top of existing residence structural concrete floor slab as indicated
13	new deck drain to match existing - core drill exist. hardrock deck as required to set drain body - see building section & detail B this sheet for more info.
	NOTE: do not use a pneumatic hammer or any other strong vibration device on balcony
14	existing low balcony curb wall & welded tube stl. railing to remain
15	existing walls to remain
16	down (2) 5 1/2" risers (exist. steps)
17	existing column or columns to remain
18	exist. recessed down lighting and associated switches to remain
19	new 7/8" exterior cement plaster over paper backed mtl. lath to match exist. - finish, texture, color, and accessories of existing conditions @ exterior walls & ceilings
20	new ceiling to match exist. (2 layers 5/8" type "x" gyp bd. assumed) installation and finish to match and be flush with exist. ceiling assembly
21	top of exist. hardrock concrete deck to remain
22	existing deck drain to be abandoned - cut and cap leader flush with bottom of struct. concrete balcony, and fill with new "DURA-CAP ®" self leveling flooring durring floor installation - see key note 12 for more info.
23	exist. framing to remain
24	existing fire sprinkler head location
25	provide new fire sprinkler head @ this location - tie into existing line over kitchen - verify head type and location with fire marshal prior to installation
26	provide R-38 insulation at new ceiling & R-13 at new walls typical
27	exist. plaster ceiling cut and remove as req'd. for new construction - see key note 19 above for more info.
28	new carpet and pad to be selected by owner
29	abandon hose bib at this location
30	extend exist. copper water heater temperature and pressure relief lines (POP-OFF VALVE OUTLETS) to bottom of exist. column at this location to drain onto remainder of existing balcony
31	existing location of water heater temperature and pressure relief lines - to be relocated as indicated - see key note 30
32	new sub flooring to match exist. exactly (1/2" wonderboard over 1/8" "enkasonic" pad assumed) over "DURA-CAP ®" floor fill to exist. hardrock deck - separate new flooring from perimeter walls with acoustical caulking - new flooring shall not be in direct contact w/ any framing
33	top of first pour (lightweight concrete) and new deck drain collar
34	top of deck drain & second pour (new hardrock concrete to match exist. deck) slope new hardrock from top of deck drain up to meet exist. hardrock deck as indicated - see detail B
35	new location of 6" x 14" mechanical room vents - paint to match exist. wall color
36	new tight line drain to match exist. - tie into exist. deck drain system as indicated
37	existing louvered garage vents to remain
38	core drill new 6" dia. hole thru existing 11" thick reinforced concrete balcony slab for new deck drain tight line drain to match exist. - see plan for exact location
39	provide 1/4" wide x 1/2" deep saw cut in exist. hardrock deck along both sides of new addition and into new deck drain

GENERAL NOTES

1. ALL WORK SHALL BE IN CONFORMANCE WITH CURRENT APPLICABLE CODES & STANDARDS
2. ALL DIMENSIONS TAKE PRECEDENCE OVER SCALE. ALL DIMENSIONS ARE TO ROUGH FRAMING UNLESS NOTED OTHERWISE. CEILING HEIGHTS ARE TAKEN FROM FINISH FLOOR TO FINISH FACE OF CEILING.
3. THE CONTRACTOR SHALL VERIFY ALL DIMENSIONS AND SITE CONDITIONS BEFORE STARTING WORK. SHOULD A DISCREPANCY APPEAR IN THE DRAWINGS OR SPECIFICATIONS, OR IN THE WORK DONE BY OTHERS FROM THE CONTRACT DOCUMENTS THAT AFFECT ANY WORK, NOTIFY THE ARCHITECT AT ONCE FOR INSTRUCTIONS ON HOW TO PROCEED. IF THE CONTRACTOR PROCEEDS WITH THE WORK AFFECTED WITHOUT INSTRUCTIONS FROM THE ARCHITECT, THE CONTRACTOR SHALL REPAIR ANY RESULTING DAMAGE OR DEFECT TO THE SATISFACTION OF THE OWNER.
4. SHOULD A CONFLICT OCCUR IN OR BETWEEN DRAWINGS AND SPECIFICATIONS, OR WHERE DETAIL REFERENCES ON CONTRACT DRAWINGS HAVE BEEN OMITTED, THE CONTRACTOR IS DEEMED TO HAVE ESTIMATED THE MOST EXPENSIVE MATERIAL AND CONSTRUCTION METHOD INVOLVED, UNLESS A WRITTEN DECISION FROM THE ARCHITECT HAS BEEN OBTAINED WHICH DESCRIBES AN ALTERNATE MATERIAL OR METHOD OF CONSTRUCTION
5. THE CONTRACTOR SHALL CONTACT THE OWNER PRIOR TO CONSTRUCTION TO OBTAIN RULES GOVERNING TIMES OF OPERATION, ACCESS, AND RULES OF CONDUCT FOR ALL PERSONNEL BY ENTERING A CONSTRUCTION AGREEMENT, THE CONTRACTOR AGREES TO ABIDE BY THESE RULES AT ALL TIMES. FAILURE TO DO SO CAN RESULT IN FINES AND/ OR DISMISSAL FROM THE PROJECT.
6. DRESS, LANGUAGE, AND BEHAVIOR OF GENERAL CONTRACTOR AND CONSTRUCTION PERSONNEL ON SITE SHOULD BE THAT WHICH WILL NOT BE PERCEIVED TO BE OFFENSIVE OR PROVIDE CAUSE FOR REASONABLE INDIVIDUALS TO TAKE OFFENSE
7. POSSESSION, USE, AND/OR DISTRIBUTION OF ALCOHOL OR ILLEGAL DRUGS WHILE ON JOBSITE OR VINTAGE CLUB PROPERTY IS NOT PERMITTED

OUTLINE SPECIFICATIONS

IT IS UNDERSTOOD THAT COMPLETE DOCUMENTATION OF EXISTING CONDITIONS IS NOT POSSIBLE WITHIN THE SCOPE OF THIS WORK. THEREFORE, IT IS RECOMMENDED THAT THE CONTRACTOR OBTAINS A COPY OF THE ORIGINAL CONSTRUCTION DOCUMENTS (SEE "PROJECT NARRATIVE" THIS SHEET) TO BECOME FULLY FAMILIAR WITH THE REQUIREMENTS OF THE WORK

THE FOLLOWING MATERIALS, FIXTURES, AND ACCESSORIES MUST BE MATCHED EXACTLY IN THE NEW WORK:

WINDOW AND DOOR FRAMES, MATERIAL, COLOR, AND FINISH

GLASS BLOCK

EXTERIOR CEMENT PLASTER: MATCH FINISH, COLOR, TEXTURE, AND ACCSEEORIES OF EXISTING CONDITIONS

INTERIOR RECESSED DOWN LIGHTS

DUPLEX OUTLETS

LIGHT SWITCHES

WONDERBOARD

ENKASONIC PAD

PROJECT NARRATIVE

EXISTING OPEN BALCONIES ARE TO BE ENCLOSED TO PROVIDE EXPANSION OF THE KITCHEN AREAS IN SEVERAL RESIDENTIAL UNITS OF THE TERRACES, ALL AFFECTED WALLS ARE NON BEARING, SO THERE IS NO STRUCTURAL IMPACT ON THE EXISTING BUILDING

EXISTING MATERIALS, TEXTURES, FINISHES, AND COLORS ARE TO BE MATCHED THROUGHOUT, NEW CONSTRUCTION HAS BEEN DESIGNED TO BLEND INTO THE EXISTING DESIGN VOCABULARY WITH OUT NEGATIVE IMPACT.

PLANS ARE BASED ON ORIGINAL CONSTRUCTION DOCUMENTS BY MCLARAND, VASQUEZ & PARTNERS 695 TOWN CENTER DRIVE, SUITE 300, COSTA MESA, CALIFORNIA 92626, (714) 549-2207, MR. BOB GOODE, PROJECT MANAGER, JOB NUMBER 83-144A

EXISTING FIRE RATING AND ACOUSTICAL INTEGRITY OF THE EXISTING BUILDING SHALL BE MAINTAINED AT ALL TIMES

PROJECT DATA

OCCUPANCY GROUP	R-1 AND S-3 (PARKING GARAGE)
TYPE OF CONSTRUCTION	TYPE III - ONE HOUR (SPRINKLERED)
STORIES	3 STORIES + PARKING GARAGE
HEIGHT	48'-0" INCLUDING PARKING GARAGE

WEBSITE / PROMOTIONAL DOCUMENT DISTRIBUTION:

THESE DRAWINGS, DETAILS, ELECTRONIC FILES, AND PORTIONS OF PLAN SETS MAY BE DISPLAYED, DISTRIBUTED, OR MADE AVAILABLE THROUGH THE WEBSITE OF RESIDENTIAL DESIGN BY: JONATHAN PELEZZARE FOR PROMOTIONAL, EDUCATIONAL, HISTORICAL, OR REFERENCE PURPOSES ONLY. NO LICENSE IS GRANTED FOR THE CONSTRUCTION, REPRODUCTION, MODIFICATION, REUSE, SALE, PREPARATION OF DERIVATIVE WORKS, OR REPLICATION OF THESE DESIGNS, DRAWINGS, DETAILS, OR ELECTRONIC FILES WITHOUT THE EXPRESS WRITTEN CONSENT OF RESIDENTIAL DESIGN BY: JONATHAN PELEZZARE. ANY UNAUTHORIZED USE, CONSTRUCTION, COPYING, MODIFICATION, DISTRIBUTION, OR RELIANCE UPON THESE DOCUMENTS OR ELECTRONIC FILES SHALL BE AT THE SOLE RISK OF THE USER. RESIDENTIAL DESIGN BY: JONATHAN PELEZZARE ASSUMES NO RESPONSIBILITY OR LIABILITY FOR ANY DAMAGES, LOSSES, CLAIMS, DEFECTS, CODE VIOLATIONS, CONSTRUCTION ERRORS, OR OTHER CONSEQUENCES ARISING FROM THE UNAUTHORIZED USE OR MISUSE OF THESE DOCUMENTS OR ELECTRONIC FILES.

© COPYRIGHT 2026 - RESIDENTIAL DESIGN BY: JONATHAN PELEZZARE - ALL RIGHTS RESERVED

REVISIONS

RESIDENTIAL DESIGN BY:
JONATHON ERIC PELEZZARE

BALCONY CONVERSION TO THE RESIDENCE OF:
STAR
INDIAN WELLS, CA. 92210

DRAWN

CHECKED

DATE
MAY - 31- 2001

SCALE
AS NOTED

JOB #

SHEET NO.
1
OF ONE SHEET

© COPYRIGHT 2026 RESIDENTIAL DESIGN BY: JONATHAN PELEZZARE ALL RIGHTS RESERVED SEE TITLE SHEET A1 FOR ADDITIONAL USE & DISTRIBUTION TERMS